ITEM	PT. NO.	DESCRIPTION	QTY.
1	18605-003	BUSHING	1
2	12098	ADJ. SCREW	1
3	12099	SPRING 3-1208-26	1
4	12100	BODY	1
5	12101	SPRING PLATE	1
6	11264	POPPETT ASSY.	1
7	18100-004B	'O' RING (012)	1
8	12102	SEAT	1

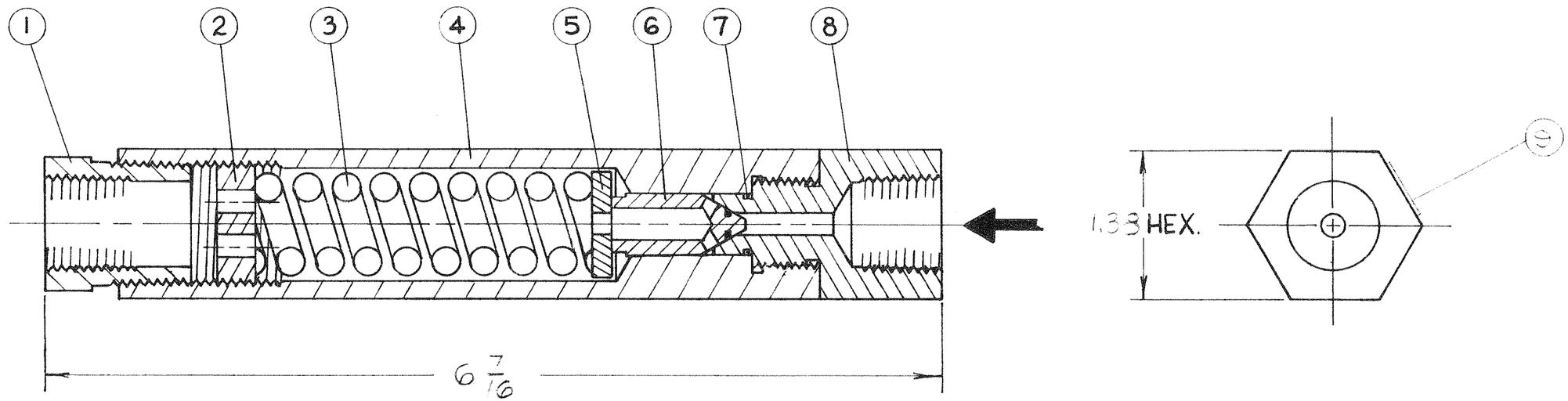

9	12227	NAME TAG	1

WORKING PRESSURE - 5,000 PSI
SET PRESSURE RANGE - 1,000 TO 5,000 PSI
MAT'L. - 316 S.S., NYLON,
BUNA-N.

THIS VALVE IS NOT ECONOMICALLY FIELD REPAIRABLE

1/2 NPT

MATERIAL:

TREATMENT	ROCKWELL "C"

ALL PIPE THREADS TO BE IN ACCORDANCE WITH AMERICAN STANDARD GAUGE UNLESS OTHERWISE SPECIFIED.

TOLERANCES UNLESS OTHERWISE SPEC.
3-PLACE DEC. ±
2-PLACE DEC. ±
FRACTIONAL ±
ANGULAR ±

NO.	REVISIONS	DATE	DR.	CK.
B	ECN # 1760	11-16-94	[illegible]	
A	ADD NAME TAG	11-87	JOSE	

NAME OF PART
PRESET RELIEF VALVE

GILMORE VALVE COMPANY
HOUSTON, TEXAS

DATE- 3·21·83
SCALE- NONE
DR. BY- RTRW
C'K'D
APP'D BY-

REFERENCE

DRAWING NO.
25304-1